# DATA SHEET

## Replacement Elements

Cartridges – TD-Small Style – Open Closed with Hole

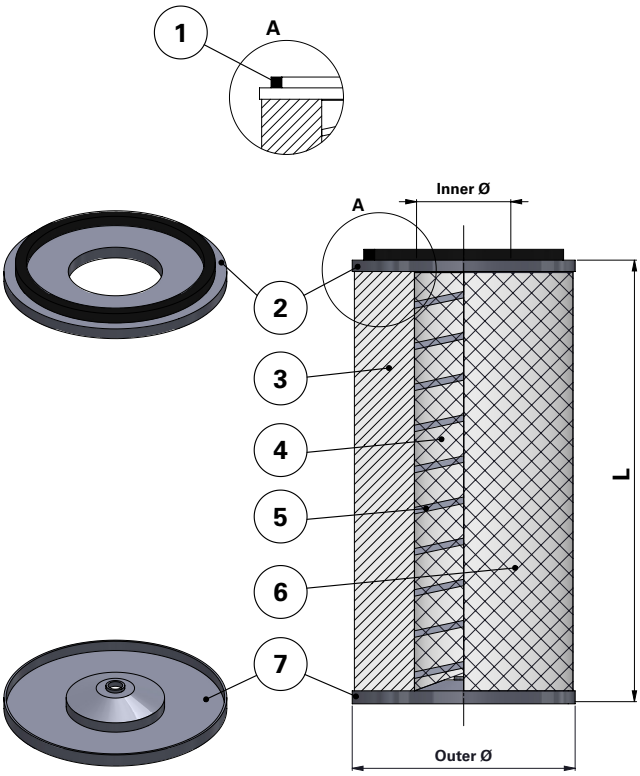


### TD-Small Style – Open Closed with Hole

TDsmall-style Cartridge Filter

For Small TD and other brands of cartridge collectors

Available with and without outer liner

| Item | Description |
|---|---|
| 1 | Gasket |
| 2 | Top end cap |
| 3 | Media pack |
| 4 | Inner liner |
| 5 | Inner beading |
| 6 | Outer liner |
| 7 | Bottom end cap with Ø13.5 mm hole |

| Dimensions [mm] | |
|---|---|
| Outer Ø | 202 |
| Inner Ø | 91 |
| L | 406 |